SPARE PARTS LIST

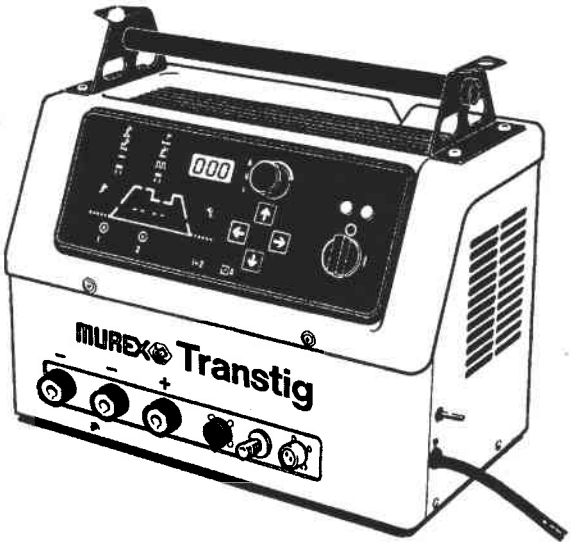

Ordering no.	Denomination	Notes
0468 300 880	Transtig DC160i 230V,50/60 Hz	OKC-connection
0468 300 887	Transtig DC200i 400V 50/60 Hz	OKC-connection
0468 300 897	Transtig DC 250i 400V 50/60 Hz	OKC-connection

NOTE! Spare parts for DC160i/200i/250i

C = component designation in the circuit diagram

Ite no.	Qty 160i	Qty 200i	Qty 250i	Ordering no.	Denomination	Notes	C
1	1	1	1	468 543-881	Handle	Complete	
2	1	1	1	468 529-001	Rubber mat		
3	1	1	1	468 278-002	Cover	When the cover is replaced, items 4 and 9 must also be replaced	
4	10	10	10	192 859-006	Locking washer	Must be pressed with 50 kg pressure, when fitted	
5	23	23	23	468 532-001	Screw		
6	2	2	2	193 392-119	Insulating bushing		
7	1	1	1	486 102-880	Display board		AP06
8	1	1	1	468 308-881	Control panel		AP05
9	1	1	1	469 402-880	Rubber seal	12 pcs of item 4 included	
10	1	1	1	321 475-889	Knob		
11	1	1	1	193 759-001	Indicating lamp	White, 28 V	HL01
12	1	1	1	193 759-002	Light-emit. diode	Yellow	V05
13	1	1	1	366 296-002	Knob		
14	2	2	2	441 819-001	Screw		
15	1	1	1	468 275-002	Protection grill		
16	1	1	1	468 519-001	Filter		
17	1	1	1	366 285-001	Protection cap		
18	1	1	1	193 307-104	Grommet inlet		
19	1	-	-	369 761-001	Mains cable	3 x 2.5 mm^2 with plug	
	-	1	1	468 516-882	Mains cable	4 x 1.5 mm^2	
20	4	4	4	467 695-001	Rubber foot		
21	1	1	1	366 295-004	Switch		QF01
22	1	-	-	455 953-001	Front cover		
	-	1	-	455 954-001	Front cover		
	-	-	1	457 814-001	Front cover		
-	1	1	1	193 260-154	Connector	6-pole for 0.75 mm^2 conductor	XS01
-	1	1	1	193 260-003	Connector	4-pole for 0.35 mm^2 conductor	XS02
-	1	1	1	193 260-156	Connector	8-pole for 0.75 mm^2 conductor	XS03
-	2	2	2	193 260-155	Connector	7-pole for 0.75 mm^2 conductor	XS05, XS21
-	5	5	5	193 260-001	Connector	2-pole for 0.35 mm^2 conductor	XS06, XS07, XS15, XS16, XS18
-	1	1	1	193 260-151	Connector	3-pole for 0.75 mm^2 conductor	XS08
-	1	1	1	193 260-153	Connector	5-pole for 0.75 mm^2 conductor	XS09
-	1	1	1	193 669-002	Connector	2-pole	XS17
-	2	2	2	193 590-302	Sleeve	For connector XS17	
-	2	2	2	193 260-152	Connector	4-pole for 0.75 mm^2 conductor	XS19, XS22
-	1	1	1	193 260-150	Connector	2-pole for 0.75 mm^2 conductor	XS23
22a	4	4	4	320 029-002	Washer		
22b	1	1	1	193 054-104	Nipple		

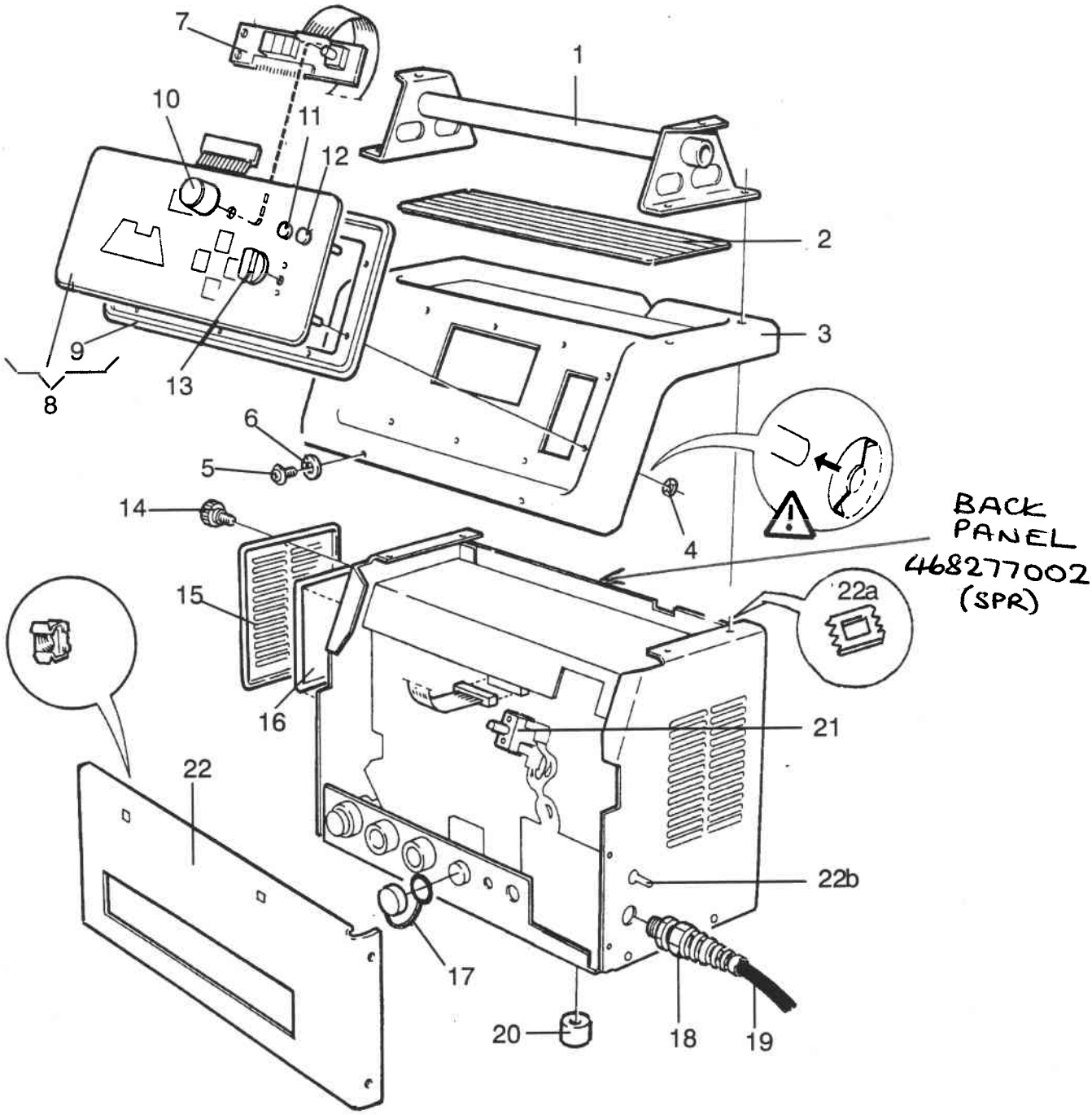
7
1
10
11
12
2
3
9
13
8
6
5
4
14
BACK
PANEL
468277002
(SPR)
22a
15
16
21
22
22b
17
20
18
19

MUREX

NOTE! Spare parts for DC160i/200i/250i

Ite. no.	Qty 160i	Qty 200i	Qty 250i	Ordering no.	Denomination	Notes	C
23	1	1	1	367 268-002	HF unit		AP11
24	5	5	5	365 534-001	Spacer washer	Rubber washer	
25	2	2	2	193 312-101	Ferrite core		
26	1	1	-	468 523-880	HF coil		TV01
			1	468 523-880	HF coil		TV01
27	2	2	2	192 859-006	Locking washer		
28	1	1	1	468 527-001	Holding plate		
29	2	2	2	365 584-002	Nail		
30	2	2	2		Busbar	Included in item X2 (Spare parts sets)	
31	1	1	1	190 315-102	Hose	To be ordered per metre 0.6 metre as delivered	
32	5	5	5	320 029-002	Earth contact washer		
34	1	1	1	468 295-001	Control transformer		TC01
						315 mAs	FU01
						800mAs	FU02
						1,0As	FU03
						630mAs	FU04
35	1	1	1	193 045-011	Terminal block	Delivered as 12-pole, to be cut to 4-pole	X02
36	1	1	1	193 054-004	Solenoid valve		YV01
37	1	1	1	193 045-011	Terminal block	Delivered as 12-pole, to be cut to 3-pole	X01
38	1	1	1	455 861-880	Holding plate		
39	1	-	-	468 545-001	Sign		
	-	1	1	468 545-002	Sign		
40	1	-	-	486 343-880	Circuit board	Suppression board	AP08
	-	1	1	486 356-880	Circuit board	Suppression board	AP08
41	1	1	1		Connector, socket	12-pole	XS10
41a	1	1	1	366 285-001	Protection cap		
42	1	1	1	486 187-880 ①	Circuit board	Suppression board complete	AP09
43	2	2	2	160 362-881	Welding current connector		XS14
44	3	3	3	466 325-001	Gasket		
45	1	1	1	5385 009-02	Connector, socket		XS12
45a	1	1	1	457 626-001	Protection cap		XS12
46	1	1	1	2521 035-01	Hose nipple		
47	1	1	1	156 867-001	Hose connector		
48	1	1	1	156 868-880	Welding current connector		XS13
49	1	-	-	467 809-880	Primary inductor		L03
50	1	-	-	468 521-001	Insulation		
50a	-	-	1	468 547-883	Capacitor	0,01 µF 250V (Y)	C13,C14 C15
50b	-	-	1	457 519-001	Fan	24V DC	EV02

① For DC250i use 486187883

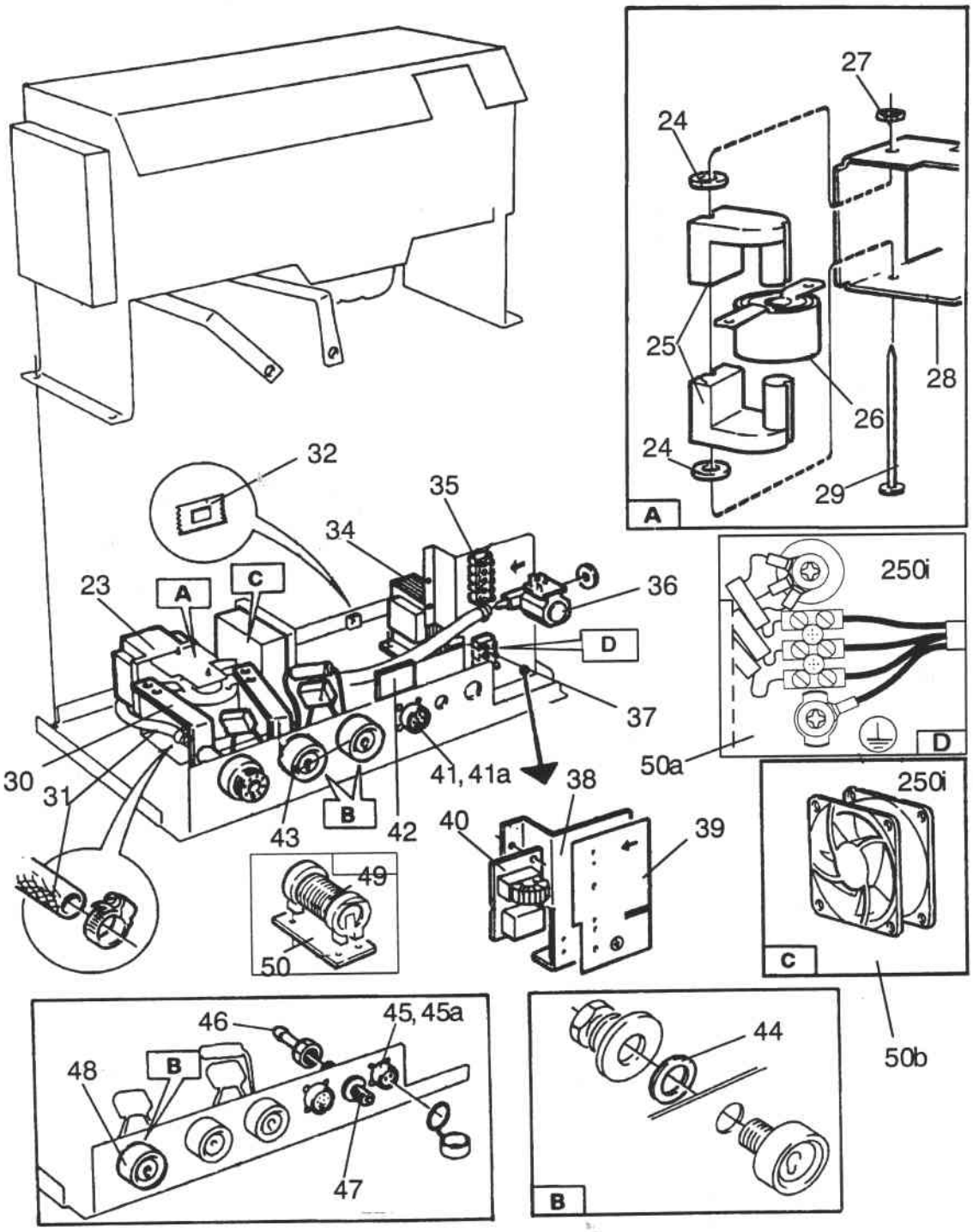
27
24
25
28
26
24
29
A
32
35
34
23
A
C
36
D
37
250i
D
50a
30
31
41, 41a
38
B
43
42
40
39
49
50
250i
C
50b
46
45, 45a
48
B
47
44
B

NOTE! Spare parts for DC160i/200i/250i

Item no.	Qty 160i	Qty 200i	Qty 250i	Ordering no.	Denomination	Notes	C
51	1	1	1	468 542-001	Lid		
52	1	1	1	468 544-001	Insulation		
53	1	1	-	486 112-880	Circuit board		AP01
			1	486 112-883	Circuit board		AP01
	1	1	1	193 069-201	Battery	For memory backup on AP01	
54	1	1	1	468 541-001	Screening box		
55	2	2	2	457 520-001	Insulation		
56	1	1	1	486 192-880	Circuit board	Suppression board	AP07
57	1	1	1	468 310-001	Insulation		
58	2	2	2	468 279-001	Insulation		
59	1	1	1	468 280-001	Insulation		
60	1	1	1		Busbar	Included in item X2	
61	1	1	1		Busbar	Included in item X2	
62	1	1	1	486 166-880	Circuit board	Shunt amplifier	AP10
63	4	4	4	366 588-001	Nut		
64	1	1	1	468 274-001	Holding plate		
65	2	2	2	468 520-001	Grill		
66	4	4	4	162 532-001	Bushing		
67	4	4	4	158 619-001	Bushing		
68	1	1	1		Busbar	Included in item X1	
69	1	1	1		Busbar	Included in item X1	
70	-	1	1		Connection bar	Included in item X1	
71	1	-	-		Busbar	Included in item X1	
72	1	1	1		Busbar	Included in item X1	
73	-	1	1		Busbar	Included in item X1	
74	1	2	2	192 903-506	Capacitor	1000µF	C02, C03
75	-	-	2	0468 547-881	Capacitor	0,1 µF 275V AC X2	C08
	2	2	-	0468 547-880	Capacitor		C09

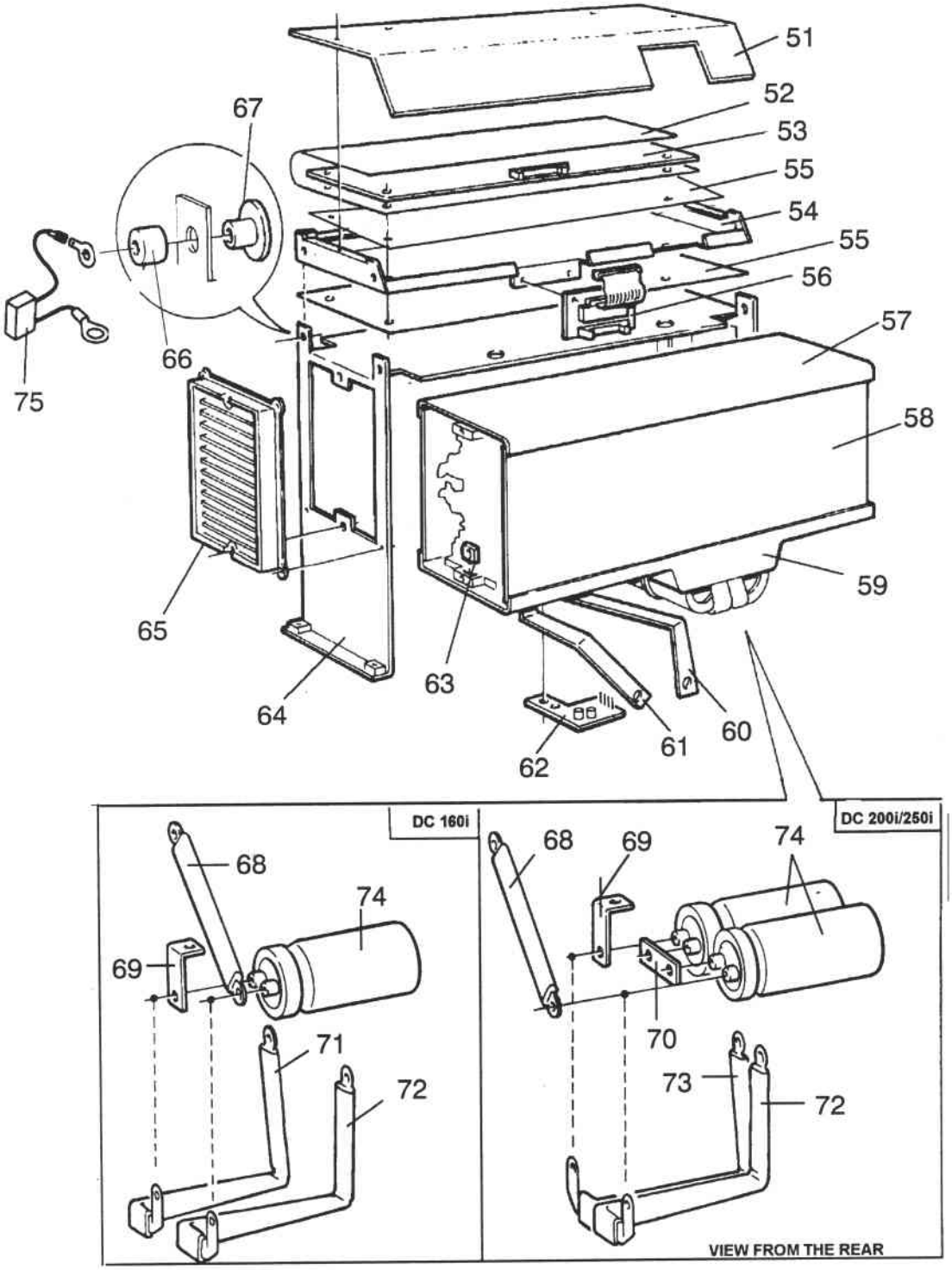
51
52
53
55
54
55
56
57
58
59
60
61
62
63
64
65
66
67
75
DC 160i
68
69
74
71
72
DC 200i/250i
68
69
74
70
73
72
VIEW FROM THE REAR

NOTE! Spare parts for DC160i/200i

Item no.	Qty 160	Qty 200	Ordering no.	Denomination	Notes	C
76	1	1	467 801-001	Fan	24 VDC	EV01
77	1	-		Circuit board	Transistor board, positive pole Included in item X3	AP02
	-	1		Circuit board	Transistor board, positive pole Included in item X4	AP02
78	1	1	192 883-150	Capacitor	0.1 µF 1000 VDC	C01
79	1	2	193 316-208	Rectifier bridge		V01, V02
80	1	1	467 800-001	Insulation		
81	1	1	455 648-001	Heat sink		
82	-	2		Busbar	Included in item X2	
83	2	2	467 797-001	Guide		
84	2	2	467 793-180	Heat sink		
85	1	-		Circuit board	Transistor board, negative pole Included in item X3	AP03
	-	1		Circuit board	Transistor board, negative pole Included in item X4	AP03
86	15	19		Spring	Included in item X3 and X4	
87	1	1	468 016-880	Inductor	Secondary	L01
88	1	1	192 716-004	Diode		V06
89	2	2	193 529-017	Capacitor	4.7 µF	C05
90	1	1	468 496-001	Holder		
91	1	1	468 215-880	Inductor	Complete	L02
92	1	1		Winding		
93	1	1		Bobbin		
94	2	2		Core		
95	2	2		Clip		
96	1	-	468 961-880	Shunt	120 mV at 140 A	RS01
	-	1	468 030-880	Shunt	120 mV at 200 A	RS01
97	1	1	192 883-150	Capacitor	0.1µF 1000 VDC	C04
98	2	2	2129 131-08	Spacer	M8	
99	1	1		Busbar	Included in item X2	
100	1	-		Thermal cutout	Opens at 130°C, closes at 100°C	ST01
	-	1		Thermal cutout	Opens at 150°C, closes at 130°C	ST01
101	1	-	467 792-880	Transformer coil		TC02
	-	1	467 806-880	Transformer coil		TC02
	1	1	466 602-001	Conductor	To be ordered per m. 0.6m/transform.	020
102	1	1	467 799-001	Clip		
103	4	4	193 312-101	Ferrite core		
			365 652-002	Tape	For air gap	
			191 124-021	Glue	For ferrite core	
104	1	2	193 948-001	Diod		
105	2	2	467 648-883	Capacitor		
106				Busbar	Included in item X2	
107				Busbar	Included in item X2	

SPARE PARTS SETS DC160i/200i

Item	Ordering no.	Denomination	Notes
X1	468 881-880	Busbars, primary	Contains items 68, 69, 70, 71, 72 and 73
X2	468 881-885	Busbars, secondary	Contains items 30, 60, 61, 82, 99, 106 and 107
X3	468 881-882	Transistor boards 160 i	Contains items 77, 85 and 15 springs (item 86)
X4	468 881-883	Transistor boards 200 i	Contains items 77, 85 and 19 springs (item 86)
X5	192 058-106	Contact oil	To be used when mounting items X3 and X4

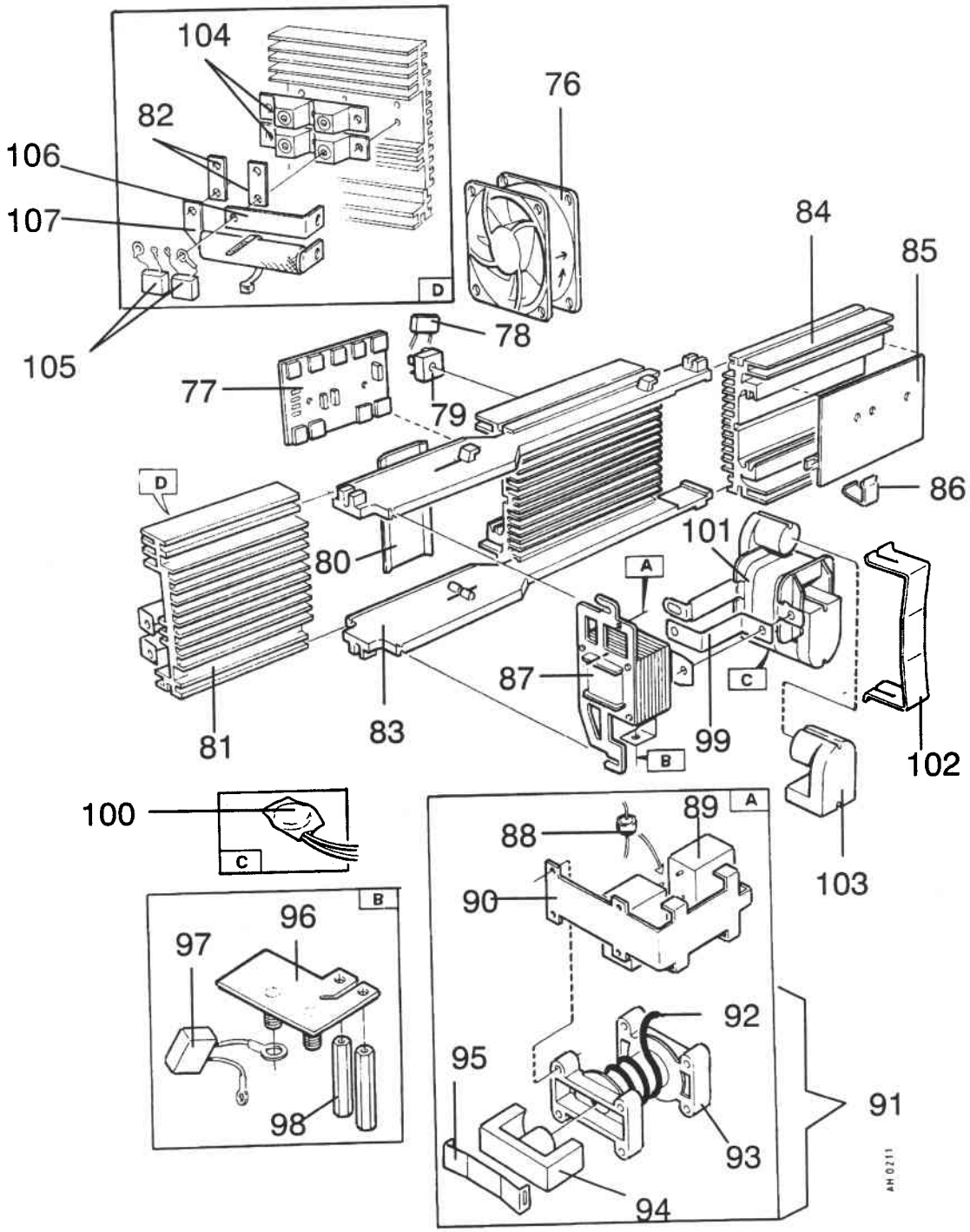

NOTE! Spare parts for DC250i

Item no.	Qty 250i	Ordering no.	Denomination	Notes	C
108	1	467 801-001	Fan	24 VDC	EV01
109	-		Circuit board	Included in item X3	AP02
110	1	192 883-150	Capacitor	0.1 µF 1000 VDC	C01
111	2	193 316-208	Rectifier bridge		V01, V02
112	1	467 800-001	Insulation		
113	1	455 646-883	Rectifier unit	Complete	
114	2	467 797-001	Guide		
115	2	467 793-180	Heat sink		
116	1		Circuit board	Included in item X3	AP03
117	19		Spring	Included in item X3	
118	1	468 016-880	Inductor	Secondary	L01
119	1	192 716-004	Diode		V06
120	2	193 529-017	Capacitor	4.7 µF	C05
121	1	468 496-001	Holder		
122	1	468 215-880	Inductor	Complete	L02
123	1		Winding	Included in item 91	
124	1		Bobbin	Included in item 91	
125	2		Core	Included in item 91	
126	2		Clip	Included in item 91	
127	1	457 304-880	Shunt	119 mV at 250 A	RS01
128	1	320 805-886	Capacitor	0.1µF 400 VDC	C04
129	2	2129 131-08	Spacer	M8	
130	1		Busbar	Included in item X2	
131	1	320 655-009	Thermal cutout	Opens at 130°C, included in item 87	ST01
132	1	457 308-880	Transformer coil		TC02
133	1	467 799-001	Clip		
134	4	193 312-101	Ferrite core		
135	1	193 948-001	Diode module		V03
	2	193 948-001	Diode module		V04
136	1		Busbar	Included in item X2	
137	1		Busbar	Included in item X2	
138	2	467 648-884	Capacitor	Compl.	C10,C11
139	1		Busbar	Included in item X2	
140	2	191 745-011	Spacer sleeve		
141	2	455 569-002	Ferrite ring core		L04,L05
142	1	455 569-003	Ferrite ring core		L03
143	2		Busbar	Included in item X2	
144	2	457 695-001	Washer		
145	1	457 557-880	Resistor	Complete 8,2 kΩ 5W	R02
146	1	193 669 002	Connector	2-way	XS17
146a		193 590 302	Sleeve	2 per connector	

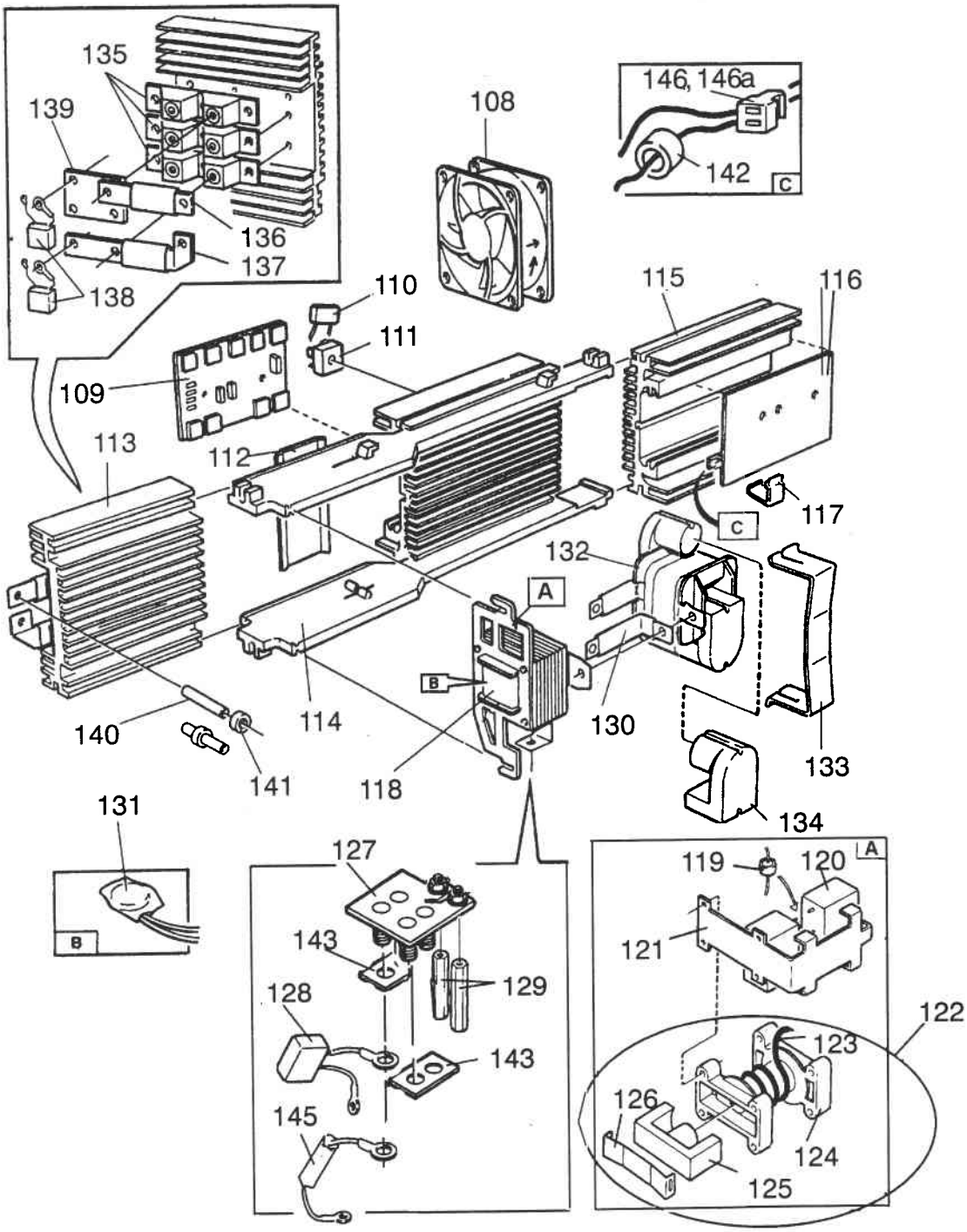

SPARE PARTS SETS DC 250i

Item	Ordering no.	Denomination	Notes
X1	468 881-880	Busbars, primary	Contains items 68, 69, 70, 71, 72 and 73
X2	468 881-888	Busbars, secondary	Contains items 30, 60, 61, 99, 105, 106, 108 and 112
X3	468 881-887	Transistor boards 250i	Contains items 77, 85 and 86
X4	192 058-106	Contact oil	To be used when mounting item X3

Murex Welding Products Limited
Hertford Road, Waltham Cross
Herts. EN8 7RP. England
Telephone: Lea Valley (0992) 710000
Telex: 25743