Spare parts list

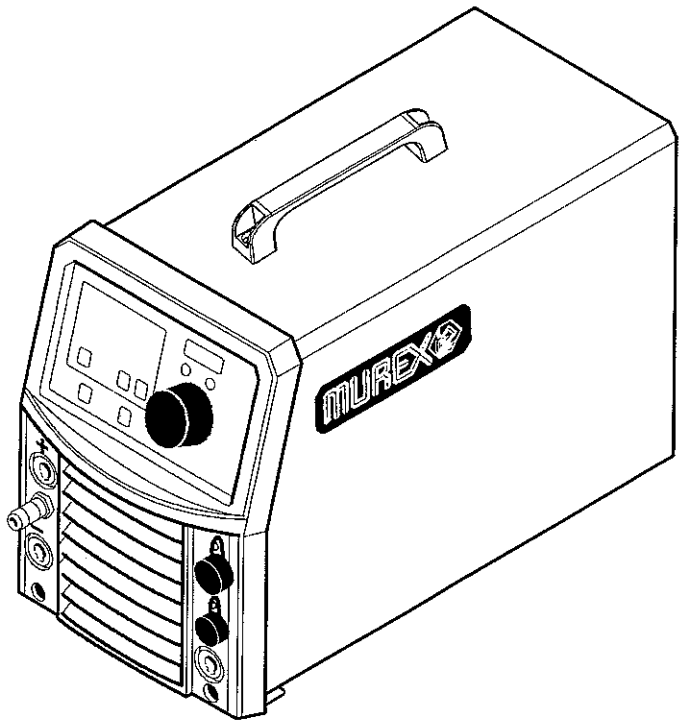

Valid for serial no. 517-xxx-xxxx

Ordering number

0459 760 893 Transtig 150-1 for 230 V mains voltage

0459 760 894 Transtig 200-1 for 230 V mains voltage

Spare parts are to be ordered through the nearest MUREX agency Kindly indicate type of unit, serial number, denominations and ordering numbers according to the spare parts list

Maintenance and repair work should be performed by an experienced person, and electrical work only by a trained electrician. Use only recommended spare parts

C = component designation in the circuit diagram

Item	Qty	Ordering no.	Denomination	Notes	C
AA1	1	0459 654 001	Handle		
AA2	2		Screw	M8x50	
AA3	1	0459 173 002	Cover		
AA4	4		Screw	M5x12	
AA5	1		Screw	M5x16 Included in item AB51, see page 24	

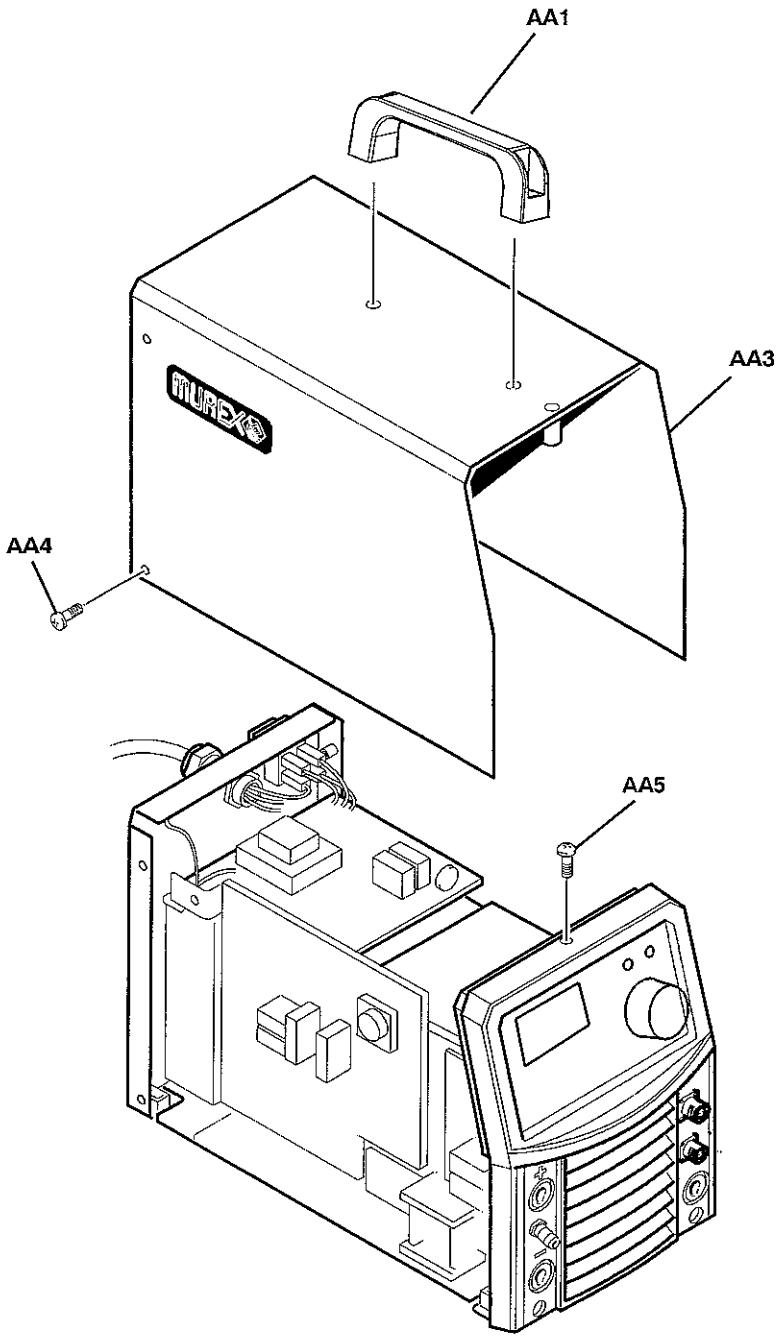

C = component designation in the circuit diagram

Item	Qty	Ordering no.	Denomination	Notes	C
AB1	1	0193 317 001	Switch	Included in item AB50	2QF1
AB2	1		Cord set	Included in item AB50	
AB3			Screw	Included in item AB51 and AB53	
AB4	1	0459 174 001	Rear panel		
AB5	1	0487 018 880	Display board	Included in item AB51	1AP2
AB6	1		Front panel	Included in item AB51 and AB53	
AB7	1		Control Panel	Included in item AB51	1AP1
AB8	1	0321 475 893	Knob	Included in item AB51	
AB9	5	0366 588 001	Nut		
AB10			Spacer	Included in item AB51	
AB11	3	0366 306 883	Connector OKC 25	Included in item AB51	29XS1 29XS2, 29XS3
AB12	3		Screw	M5x12 Torx Included in item AB51	
AB13	1		Cable shoe	Included in item AD4 see page 28	
AB14	1	0459 194 003	Busbar, positive		
AB15	1	0459 194 002	Busbar, negative		
AB16	1	0194 130 120	Nut	Included in item AB51	
AB17	1	0459 269 001	Gas connection	Included in item AB51	
AB18	1		Socket	Included in item AB52	29XS4, 29xS5

SPARE PARTS SETS

Item	Ordering no.	Denomination	Notes
AB50	0459 183 880	Mains module	Includes items: AB1 switch AB2 mains cable with plug, cable clamp and two ferrite rings 2L1
AB51	0459 386 888	Front complete, TIG	Includes items: AA5, AB3, AB5 AB6, AB7, AB8, AB10 AB11, AB12 AB16, AB17 AB18
AB52	0459 280 885	Cable set	2 pole socket 29XS4 5 pole socket 29XS6 1 pole socket 29XS8 and the wires between them.

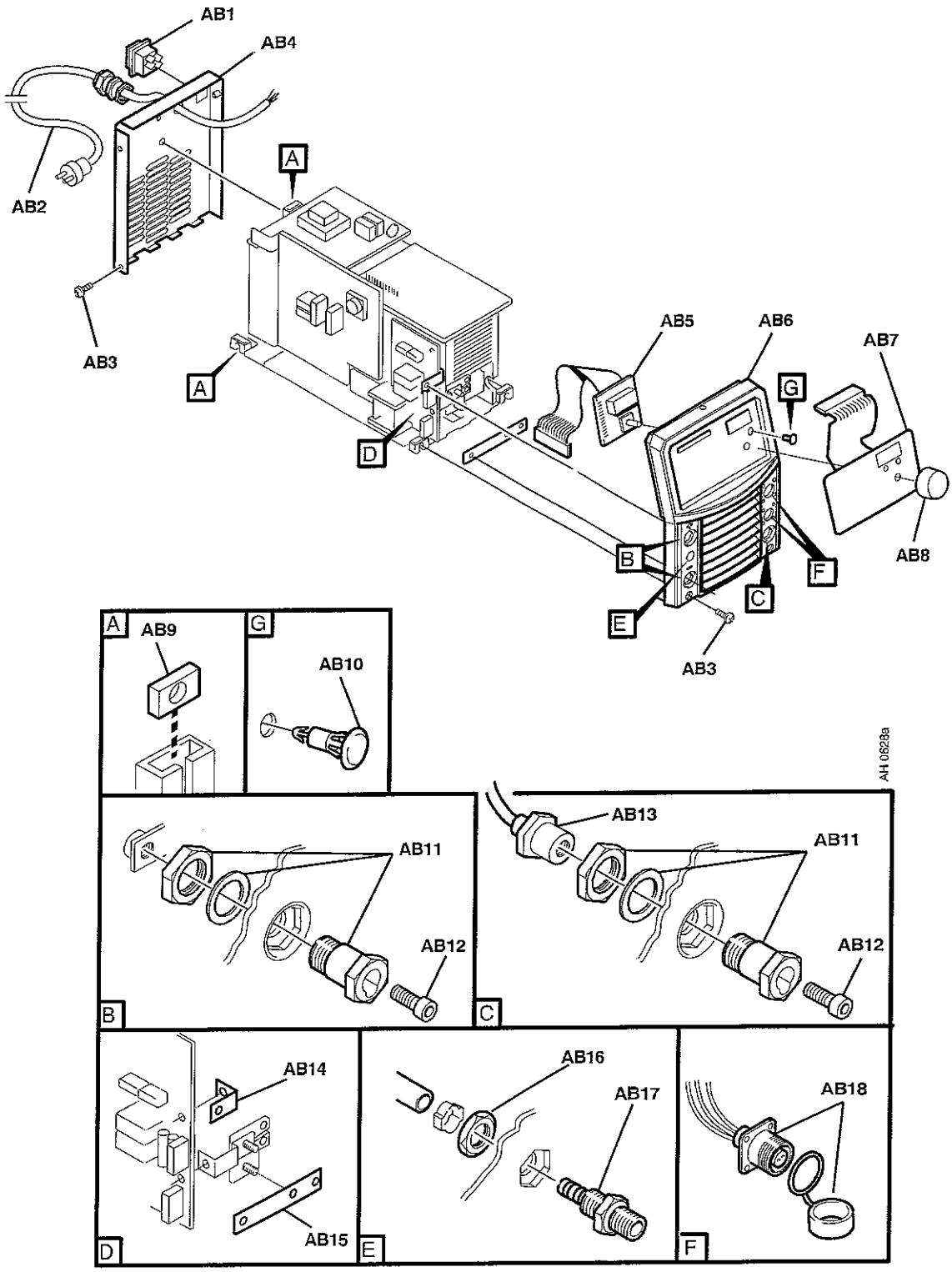
AB1
AB4
AB2
AB3
A
A
D
AB5
AB6
AB7
G
B
F
C
E
AB3
AB8
A
AB9
G
AB10
AH 0628a
AB11
AB12
B
AB13
AB11
AB12
C
AB14
AB15
D
AB16
AB17
E
AB18
F

C = component designation in the circuit diagram

Item	Qty 150	Qty 200	Ordering no.	Denomination	Notes	C
AC1	1	1	0487 064 880	Power supply board		2AP1
AC2	1	1	0459 280 880	Cable set	Including wires 1501, 1502 and their sockets	15XS1, 15XS2, 15XS7, 15XS8
AC2	1	1	0459 280 880	Cable set	Including wires 1501, 1502 and their sockets	15XS1, 15XS2, 15XS7, 15XS8
	1	1	0193 700 702	Cable set		20XS3, 20XS4
	1	1	0459 280 881	Cable set		20XS1, 20XS2 20XS5
AC3	1	1	0459 390 880	Control board kit	Before mounting the board, the strapping must be set up to fit CaddyTig 150 or CaddyTig 200 See the service manual	20AP1
AC3	1	1	0459 390 880	Control board kit	Before mounting the board, the strapping must be set up to fit OrigoTig 150 or OrigoTig 200 See the service manual	20AP1
AC4	1		0468 940 004	Thermal switch	Socket connector 15XS5 included	15ST2
		1	0468 940 005	Thermal switch	Socket connector 15XS5 included	15ST2
AC5	1	1		Diode module	See item AC50	15D1
AC6	1	1	0459 177 001	Inductor		15L1
AC7	1	1	0459 355 880	Transformer	Includes: main transformer, socket 15XS4 socket 15XS6, thermal switch 15ST1	15TM1
AC8			0487 060 880	Secondary board		15AP2
AC9	1	1	0459 273 001	Earth bracket		
AC10	1		0194 158 001	Capacitor	1000 uF 400 V DC	15C1
		1	0194 158 002	Capacitor	2000 uF 400 V DC	15C1
AC11	1		0467 801 002	Fan	24 V DC; With cables and socket 15XS3	15EV1
AC11		1	0458 065 002	Fan	24 V DC; With cables and socket 15XS3	15EV1
AC12	1	1		Circuit board	See item AC51	15AP1
AC13	1	1		Semiconductor module	See item AC51	
AC14	1	1	0468 030 880	Shunt		15RS1
AC15	1	1	0459 194 001	Busbar		

SPARE PARTS SETS

Item	Qty 150	Qty 200	Ordering no.	Denomination	Notes
AC50	1		0459 385 880	Diode module kit	Includes: item AC5 diode module, screws (type A and B), thermal compound and roller
		1	0459 385 881	Diode module kit	Includes: item AC5 diode module screws (type A and B) thermal compound and roller
AC51	1		0459 384 880	Power board kit	Includes: item AC12 power board, item AC13 semiconductor module, screws (type A and B), thermal compound and roller
		1	0459 384 881	Power board kit	Includes: item AC12 power board, item AC13 semiconductor module screws (type A and B), thermal compound and roller
-			0458 910 002	Roller handle	For the roller in the spare parts sets above
-			0192 058 101	Thermal compound	

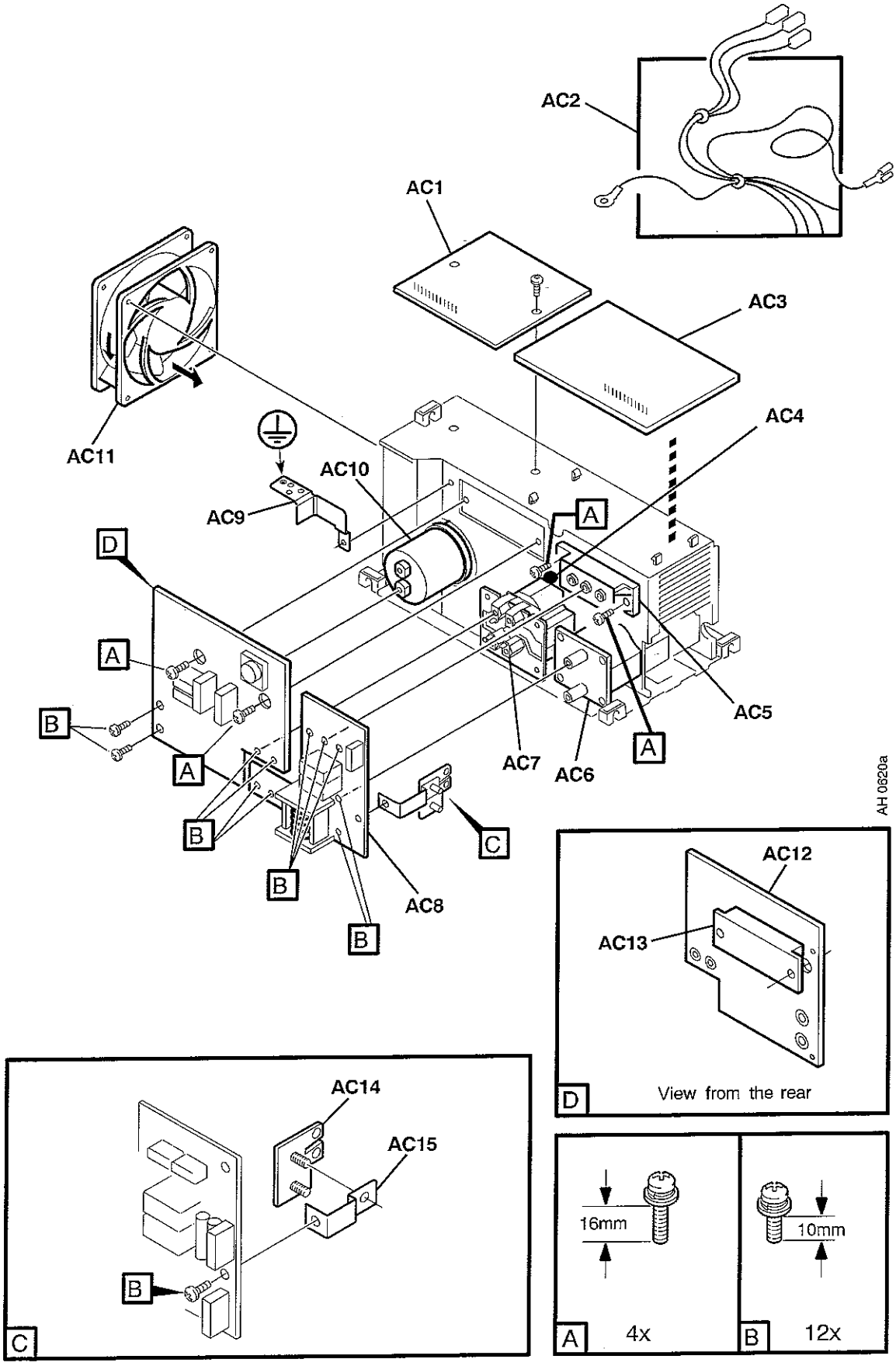
AC2
AC1
AC3
AC4
AC11
AC10
AC9
A
D
A
B
A
B
B
B
C
AC8
AC7
AC6
A
AC5
AH 0620a
AC12
AC13
D
View from the rear
AC14
AC15
B
C
16mm
A
4x
10mm
B
12x

C = component designation in the circuit diagram

Item	Qty	Ordering no	Denomination	Notes	C
AD1	1	0193 054 005	Solenoid valve	230 V AC	10YV1
AD2	1	0194 130 120	Nut		
AD3	1	0456 496 001	Hose	D = 9/5 mm, L = 0.57 metre reinforced PVC	
AD4	1	0487 028 880	Circuit board TIG		10AP1
AD5	1	0459 389 880	HF coil, complete		10TV1, 10XS1

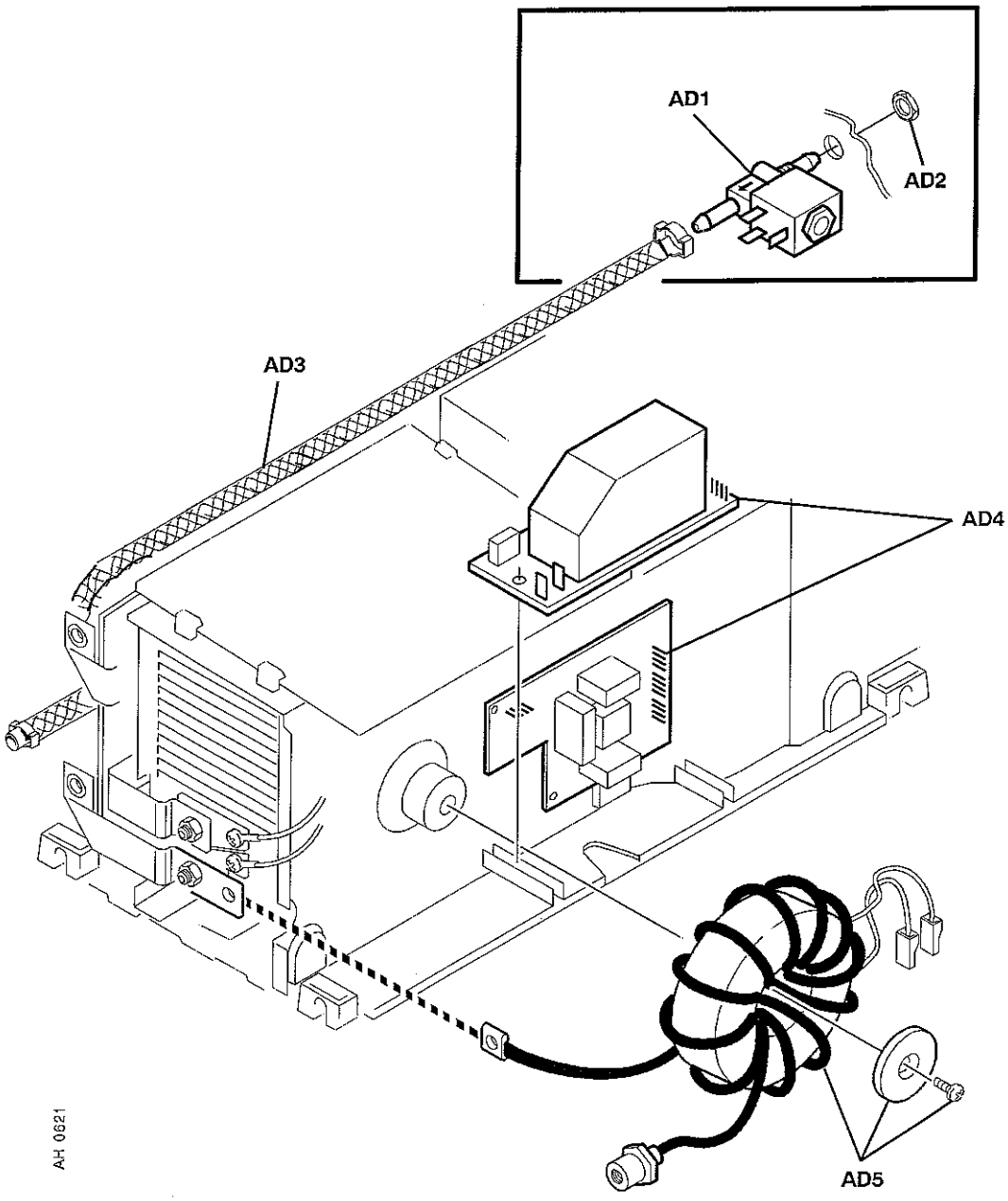

Accessories

	MMA welding and return cable kit ("crocodile" type holder) . . . . . . *Suitable for Transtig 150-1*	0349 501 078
	MMA welding and return cable kit ("screwe" type holder) . . . . . . *Suitable for Transtig 150-1*	0349 501 079
	MMA welding and return cable kit ("screwe" type holder) . . . . . . *Suitable for Transtig 200-1*	0700 006 881
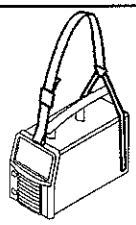	**Shoulder strap**	0459 368 880
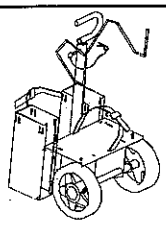	**Trolley for small gas bottle**	0459 366 880