Autolynx 161

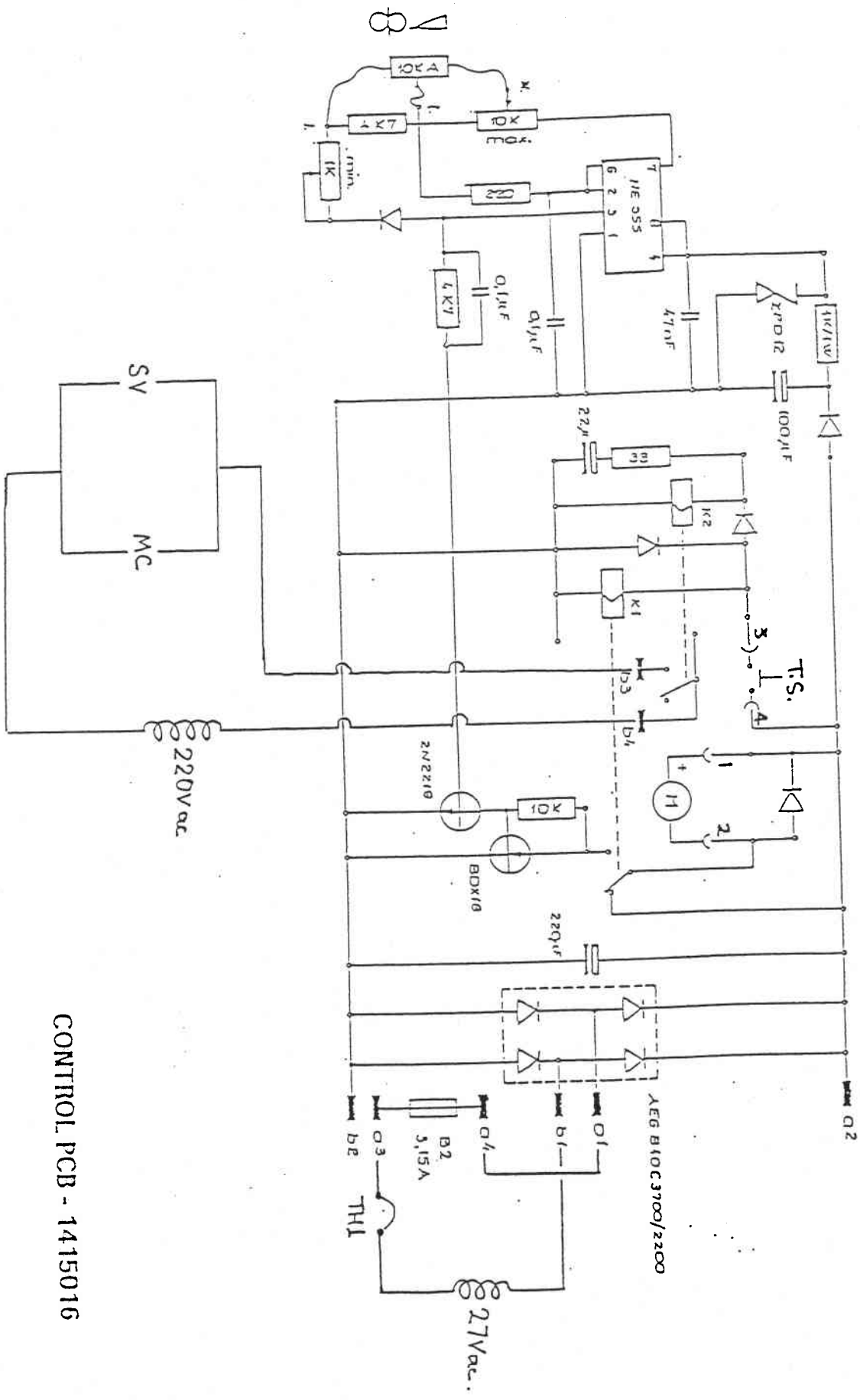

CONTROL PCB - 1415016